250*245*220

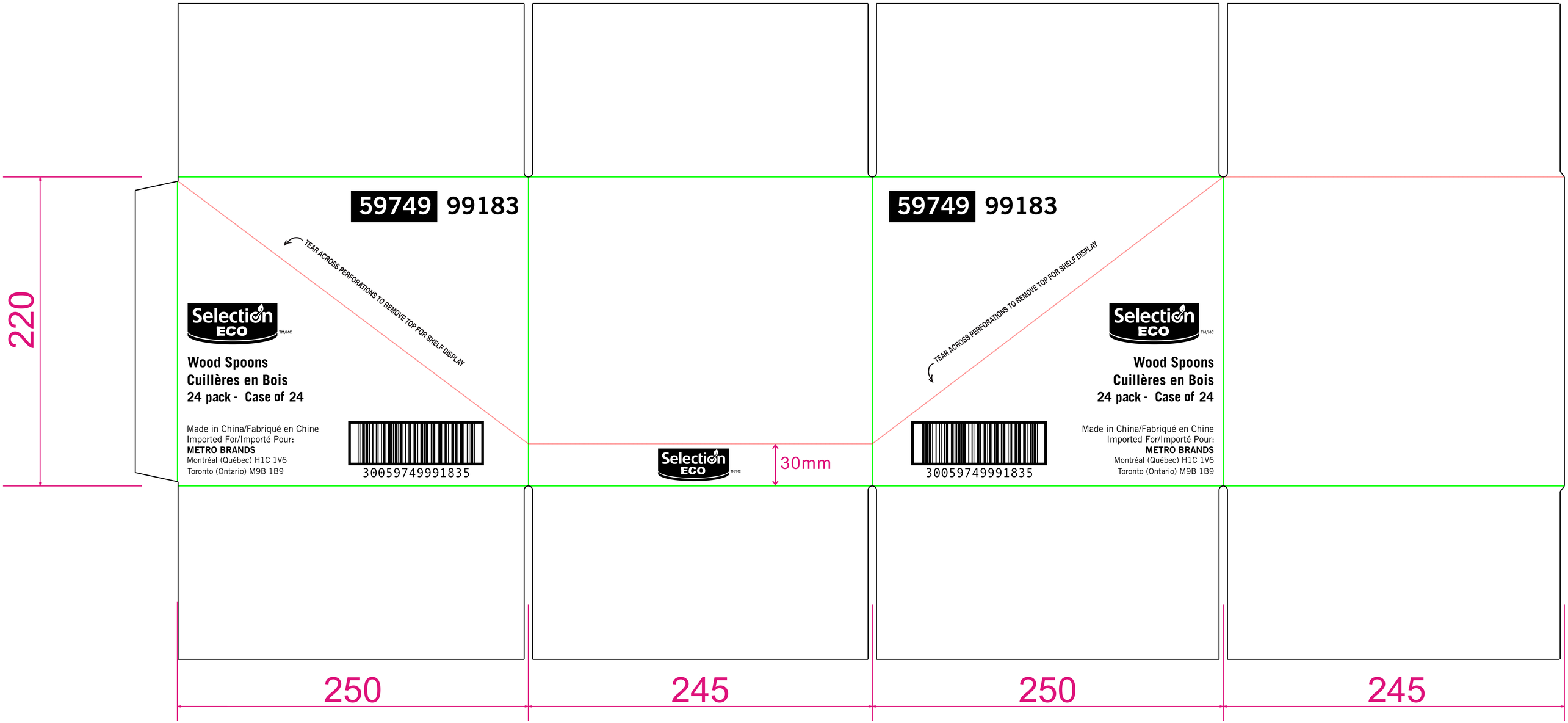
220
59749 99183
TEAR ACROSS PERFORATIONS TO REMOVE TOP FOR SHELF DISPLAY
Selection ECO TM/MC
Wood Spoons
Cuillères en Bois
24 pack - Case of 24
Made in China/Fabriqué en Chine
Imported For/Importé Pour:
METRO BRANDS
Montréal (Québec) H1C 1V6
Toronto (Ontario) M9B 1B9
30059749991835
Selection ECO TM/MC
30mm
59749 99183
TEAR ACROSS PERFORATIONS TO REMOVE TOP FOR SHELF DISPLAY
Selection ECO TM/MC
Wood Spoons
Cuillères en Bois
24 pack - Case of 24
30059749991835
Made in China/Fabriqué en Chine
Imported For/Importé Pour:
METRO BRANDS
Montréal (Québec) H1C 1V6
Toronto (Ontario) M9B 1B9
250
245
250
245